Round 1 - Thursday, April 28, 2022

SHOTLINK

Huntsville Championship

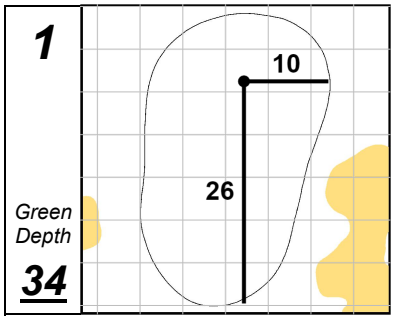

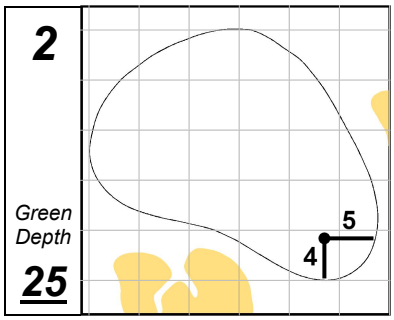

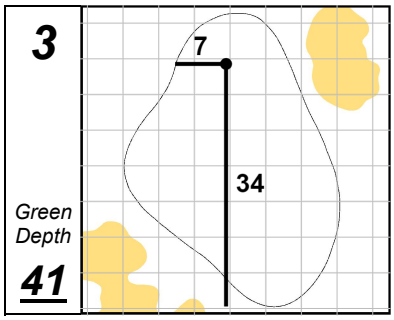

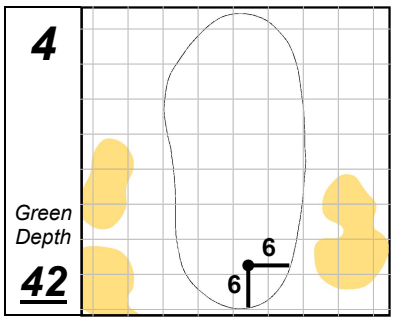

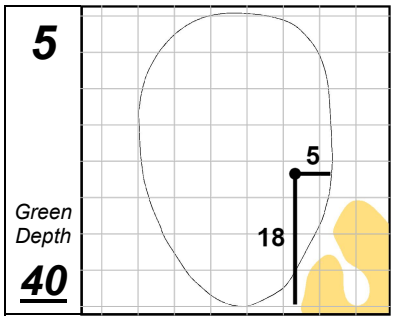

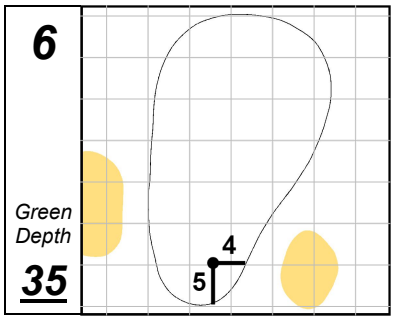

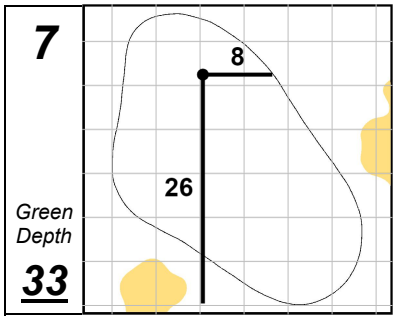

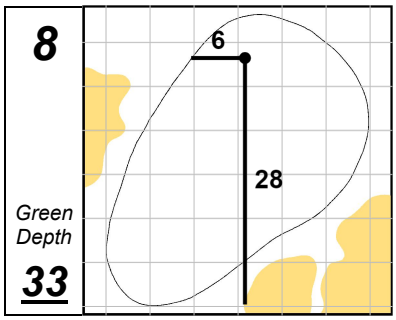

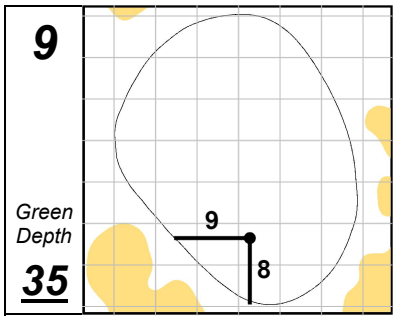

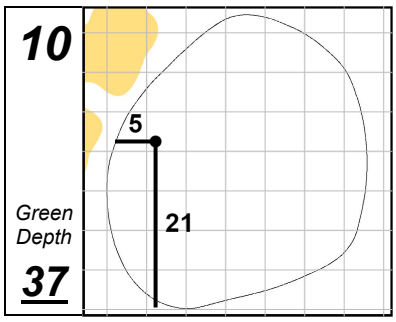

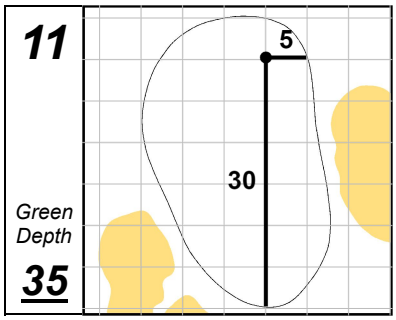

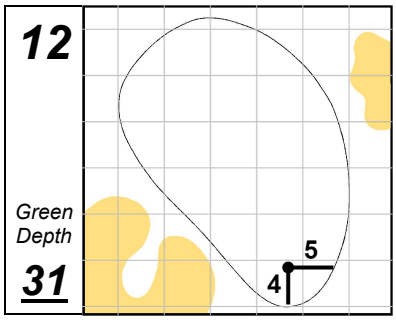

The Ledges

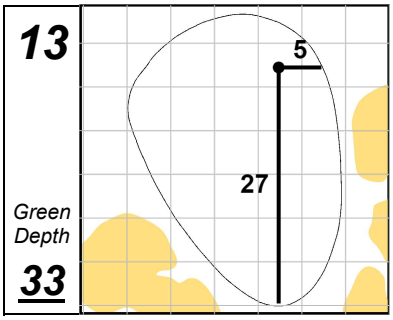

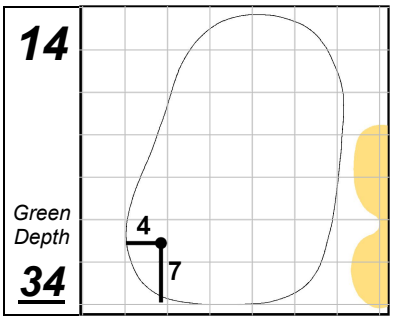

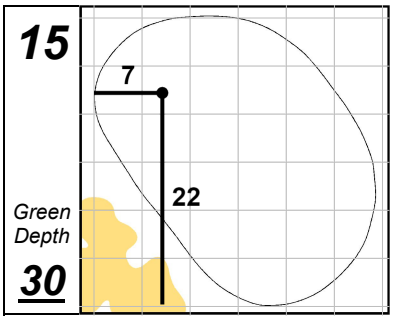

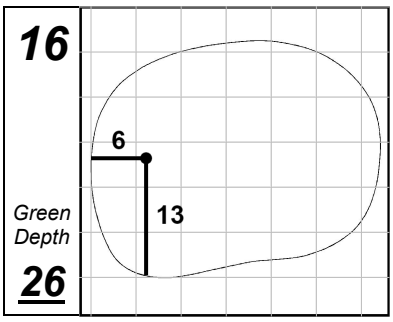

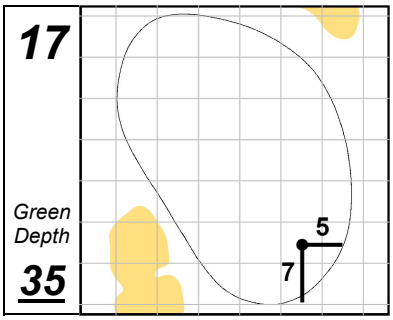

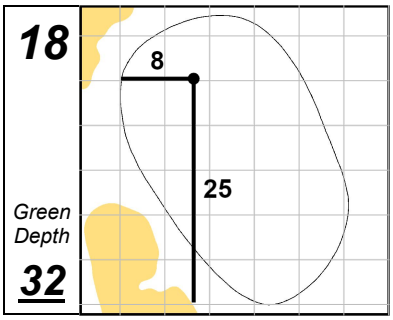

Each side of a complete square on the green represents 5 YARDS.

Wednesday, April 27, 2022 1:26:40 PM